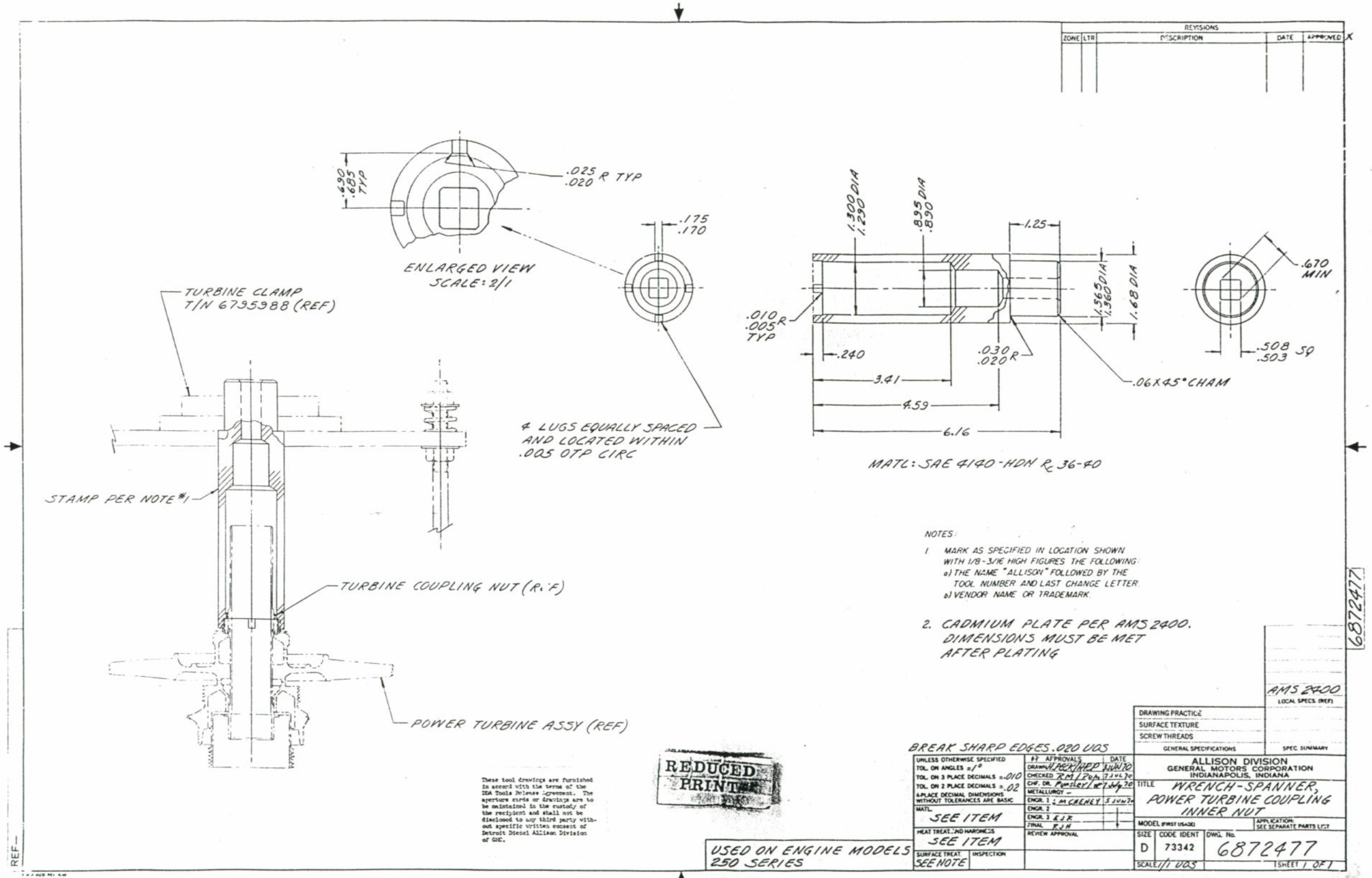

NOTES:

1. MARK AS SPECIFIED IN LOCATION SHOWN WITH 1/8-3/16 HIGH FIGURES THE FOLLOWING:
   a) THE NAME "ALLISON" FOLLOWED BY THE TOOL NUMBER AND LAST CHANGE LETTER.
   b) VENDOR NAME OR TRADEMARK.

2. CADMIUM PLATE PER AMS 2400. DIMENSIONS MUST BE MET AFTER PLATING

6872477

AMS 2400
LOCAL SPECS. (REF)

DRAWING PRACTICE
SURFACE TEXTURE
SCREW THREADS
GENERAL SPECIFICATIONS
SPEC. SUMMARY

BREAK SHARP EDGES .020 UOS

UNLESS OTHERWISE SPECIFIED	BY APPROVALS	DATE
TOL. ON ANGLES ±1°	DRAWN H. PECK/HPP	3 JUN 70
TOL. ON 3 PLACE DECIMALS ±.010	CHECKED RM / Pom	7 JUL 70
TOL. ON 2 PLACE DECIMALS ±.02	CHF. DR. Pumsley / WP	7 July 70
4-PLACE DECIMAL DIMENSIONS WITHOUT TOLERANCES ARE BASIC	METALLURGY –	
	ENGR. 1 J M CHENEY	5 JUN 70
MATL. SEE ITEM	ENGR. 2	
	ENGR. 3 E J R	
	FINAL R J H	
HEAT TREAT. AND HARDNESS SEE ITEM	REVIEW APPROVAL	
SURFACE TREAT. SEE NOTE / INSPECTION		

ALLISON DIVISION
GENERAL MOTORS CORPORATION
INDIANAPOLIS, INDIANA

TITLE WRENCH-SPANNER, POWER TURBINE COUPLING INNER NUT

MODEL (FIRST USAGE) | APPLICATION: SEE SEPARATE PARTS LIST

SIZE	CODE IDENT	DWG. No.
D	73342	6872477

SCALE 1/1 UOS | SHEET 1 OF 1

These tool drawings are furnished in accord with the terms of the IDA Tools Release Agreement. The aperture cards or drawings are to be maintained in the custody of the recipient and shall not be disclosed to any third party without specific written consent of Detroit Diesel Allison Division of GMC.

REDUCED PRINT

USED ON ENGINE MODELS 250 SERIES

REF

FILE COPY